Содержание

GPIO 3
ESD 3
Power 3
Connectors 3
DRY\WET contacts 3
NAMUR 4

GPIO

ESD

Power

Connectors

DRY\WET contacts

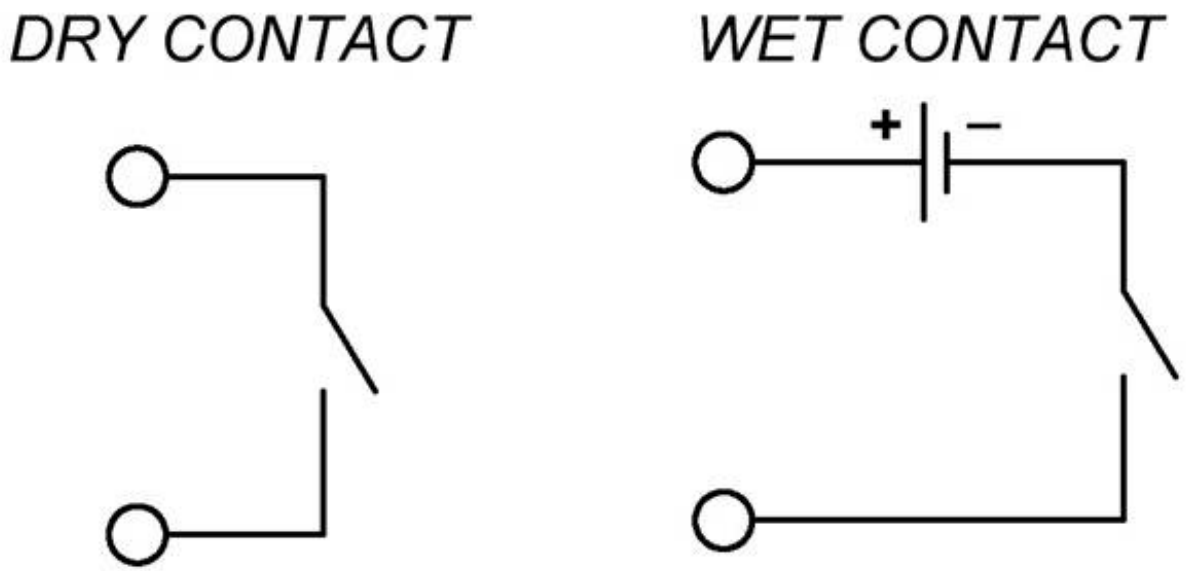

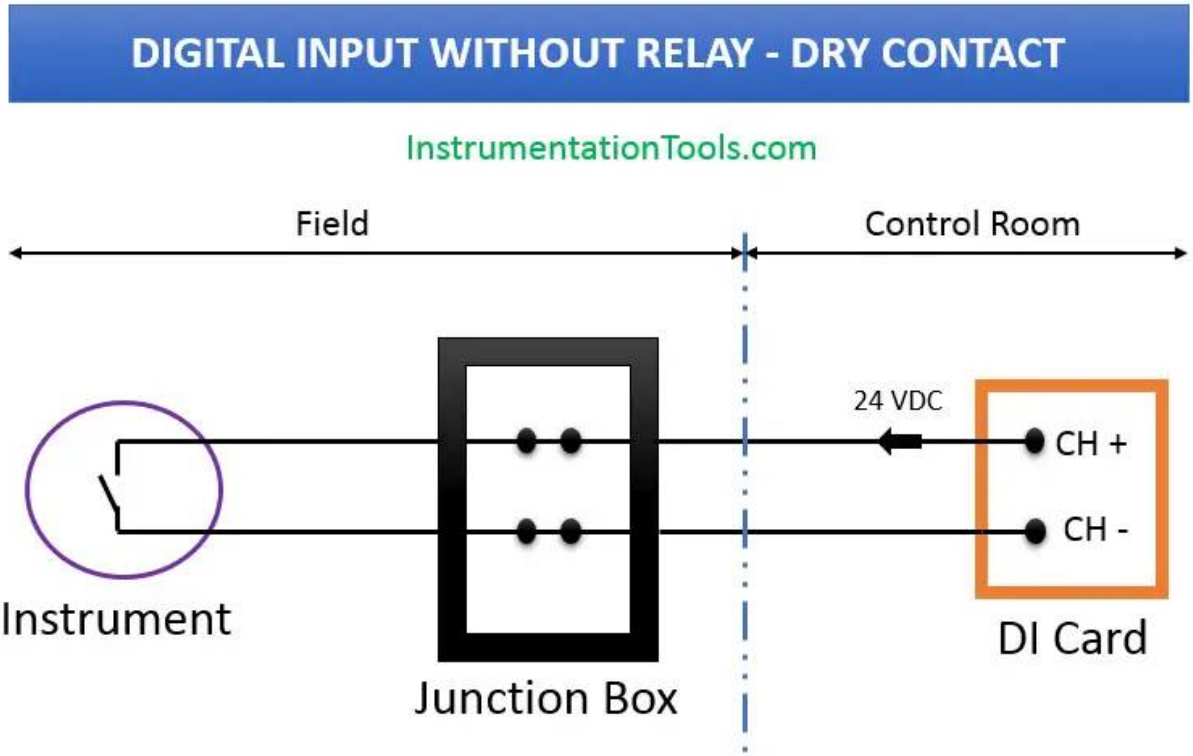

NAMUR

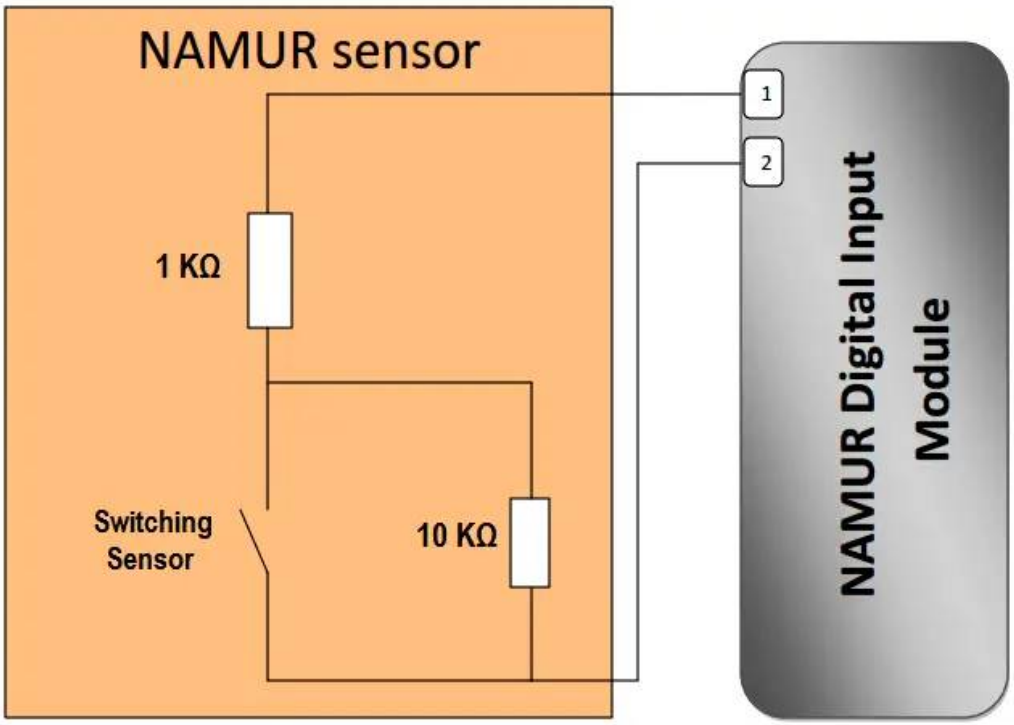

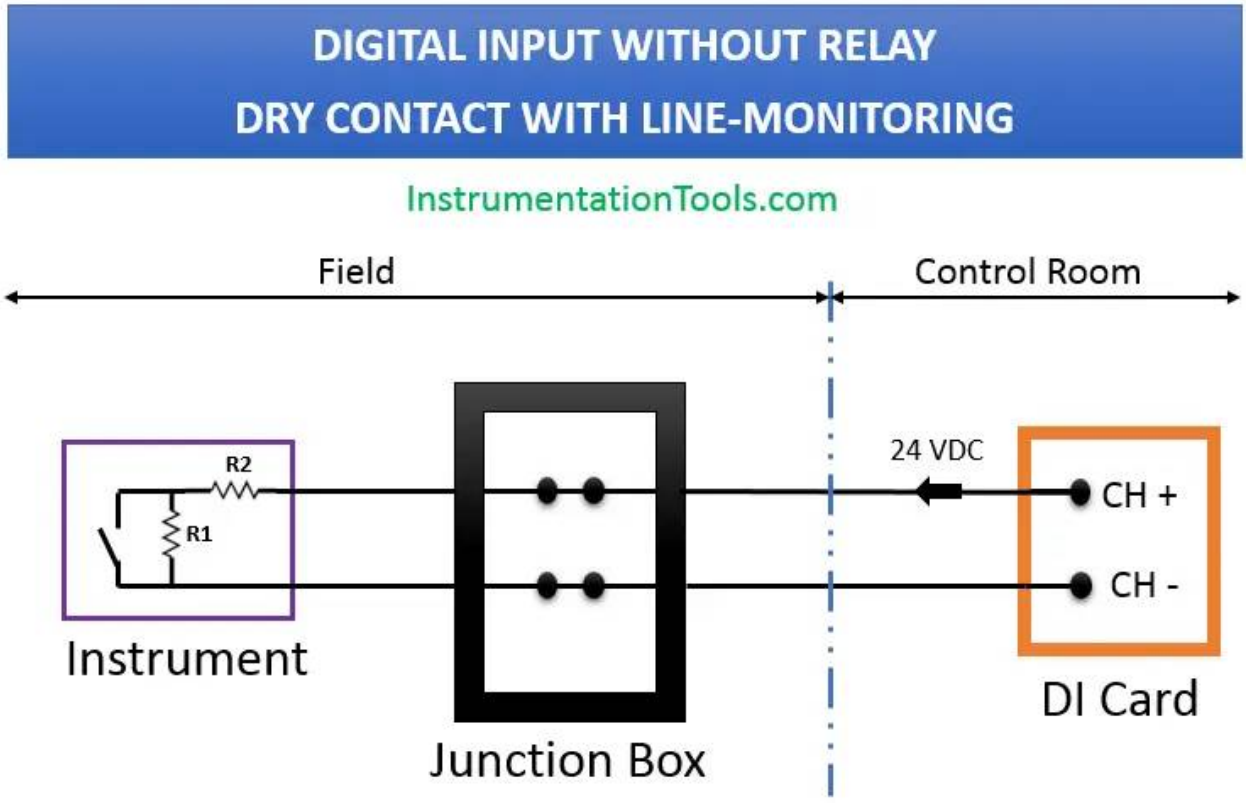

R1 & R2 are for short circuit and open circuit detection

R1 < R2