Содержание

Sensors 3
Manufacturers 3
PIR 3
Линза Френеля 3
Фоторезисторы 4
Visible Light 5

Sensors

Manufacturers

https://www.senbasensor.com/	Senba

PIR

Senba	https://www.senbasensor.com/pyroelectric-infrared-sensor/

RE200B	
D203S	TO-5
LHI874	
LHI878	

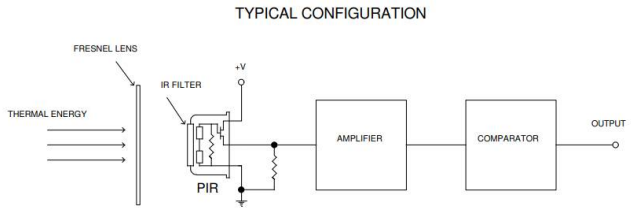

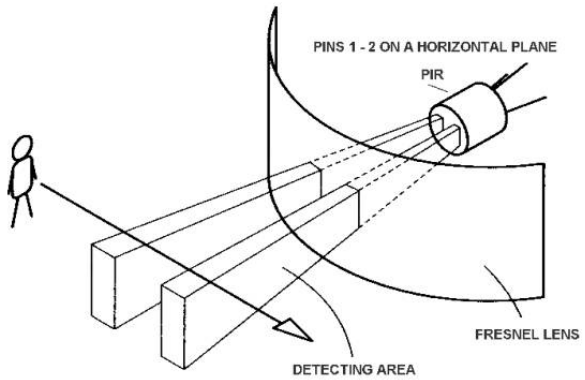

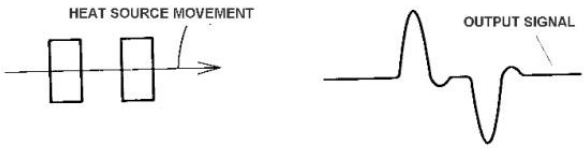

Линза Френеля

Fresnel lens

83		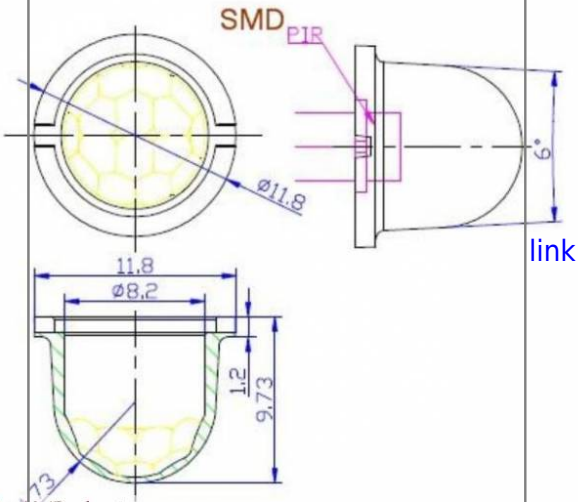	link
83		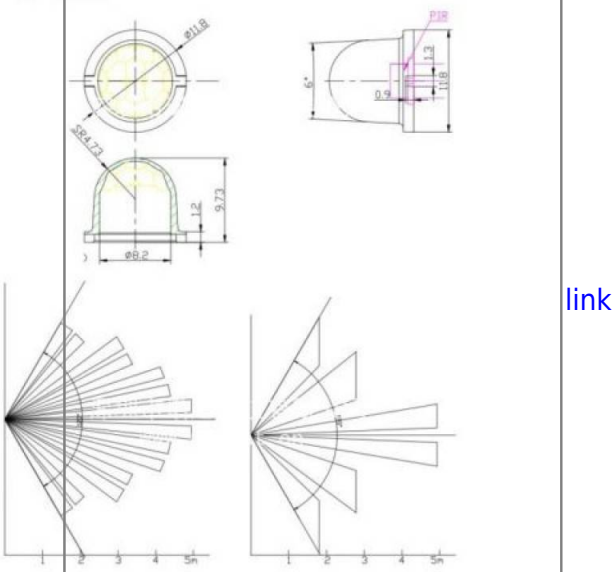	link

Фоторезисторы

5.1mm	5506, 5516, 5523, 5537, 5539, ...
12mm	1200, 1201, 1202, 1203, 1204, 1205, ...
20mm	2000, 2001, 2002, 2003, 2004, 2005, ...

PARAMETERS

Model	5516	5528	5537	5539	5549
Withstand voltage	150V	150V	150V	150V	150V
Maximum power	90MW	90MW	90MW	90MW	90MW
Ambient temperature	-30-70℃	-30-70℃	-30-70℃	-30-70℃	-30-70℃
Central wavelength	540NM	540NM	540NM	540NM	540NM
Bright resistance	5-10K	8-20K	20-50K	30-90K	80-150K
Dark resistance	0.2M	1M	5M	10M	20M
Gamma value	0.6	0.65	0.7	0.7	0.8
Response time	30MS	30MS	30MS	30MS	30MS



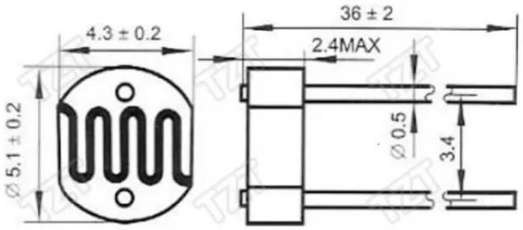



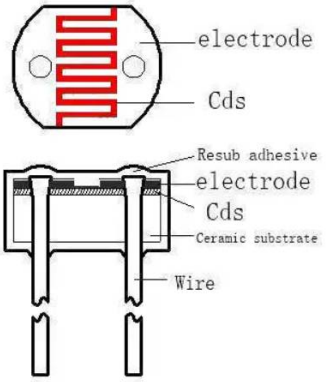

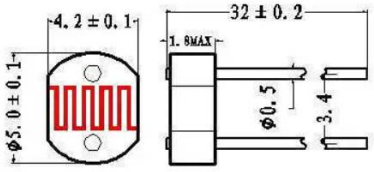

Visible Light

Senba	https://www.senbasensor.com/visible-light-sensor_2/