Содержание

AUDIO 3
CODEC 3
Amplifier 5
Buzzers 6
Microphone 8
Speaker 8

AUDIO

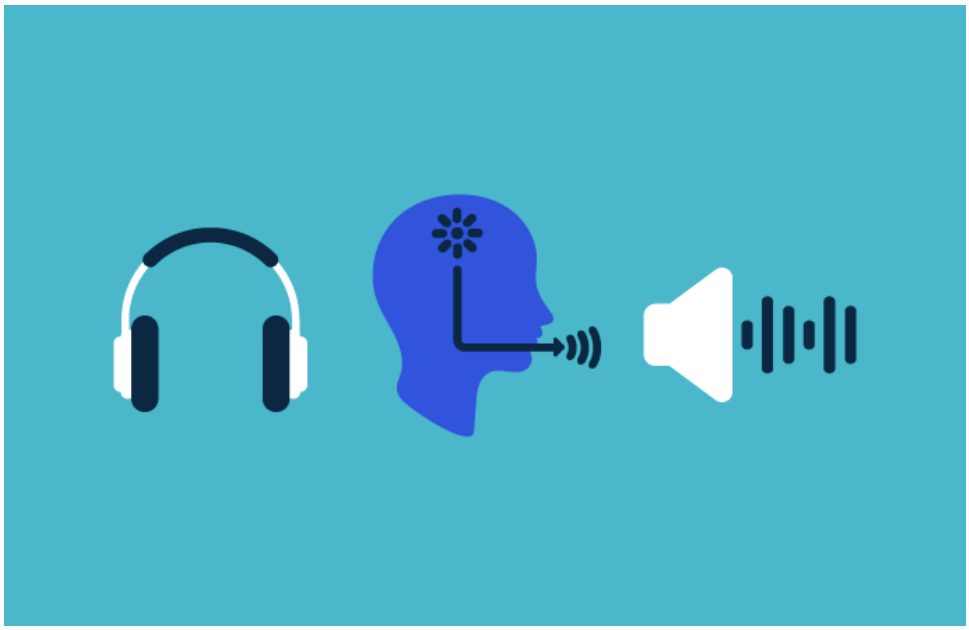

CODEC

NAU88C10YG	Nuvoton	Mono Audio Codec with 2-wire Control Interface	0.63$	1W	Mono	https://doc.inmys.ru/hash/8299e5eec4f546d429ade45ee0083891/nuvoton~nau88c10yg.pdf
NAU8814	Nuvoton	Mono Audio Codec with Speaker Driver and Equalizer	1$	1W	Mono	https://doc.inmys.ru/hash/072f57728e4b455df96b113215f7ce33/DS_NAU8814_DataSheet_EN_Rev3.1.pdf
NAU88C22	Nuvoton	24-bit Stereo Audio Codec with Speaker Driver	0.66$	1W	Stereo	https://doc.inmys.ru/hash/ae625c521ed4b7daf93510c136a325c0/nuvoton~nau88c22yg.pdf

Part No	Description	# of ADC	# of DAC	SNR (dB) ADC	SNR (dB) DAC	THD (dB) ADC	THD (dB) DAC	Sample Rate (kHz)	Audio Format	CTRL IF	Analog/ Digital (V)	Package (mm)
NAU8810YG	Mono Audio CODEC	1	1	91	93	-79	-84	8 ~ 48	I2S/TDM/PCM	2-Wire	2.5V ~ 3.6V 1.6V ~ 3.6V	QFN20 (4×4)
NAU8812RG	Mono Audio CODEC with speaker driver	1	1	91	93	-79	-84	8 ~ 48	I2S/TDM/PCM	2/3/4-Wire	2.5V ~ 3.6V 1.6V ~ 3.6V	SSOP28
NAU8812YG	Mono Audio CODEC with speaker driver	1	1	91	93	-79	-84	8 ~ 48	I2S/TDM/PCM	2/3/4-Wire	2.5V ~ 3.6V 1.6V ~ 3.6V	QFN32 (5×5)

Part No	Description	# of ADC	# of DAC	SNR (dB) ADC	SNR (dB) DAC	THD (dB) ADC	THD (dB) DAC	Sample Rate (kHz)	Audio Format	CTRL IF	Analog/ Digital (V)	Package (mm)
NAU8814YG	Mono Audio CODEC with speaker driver equalizer	1	1	91	93	-79	-84	8 ~ 48	I2S/TDM/PCM	2/3-Wire	2.5V ~ 3.6V 1.6V ~ 3.6V	QFN24 (4×4)
NAU8820YG	Stereo Audio CODEC	2	2	90	94	-80	-84	8 ~ 48	I2S/TDM/PCM	2/3/4-Wire	2.5V ~ 3.6V 1.6V ~ 3.6V	QFN32 (5×5)
NAU8822AYG	Stereo Audio CODEC with speaker driver	2	2	90	94	-80	-84	8 ~ 48	I2S/TDM/PCM	2/3/4-Wire	2.5V ~ 3.6V 1.6V ~ 3.6V	QFN32 (5×5)
NAU88C10YG	Mono Audio CODEC	1	1	91	93	-79	-84	8 ~ 48	I2S/TDM/PCM	2-Wire	2.5V ~ 3.6V 1.6V ~ 3.6V	QFN20 (4×4)
NAU88C14YG	Mono Audio CODEC with speaker driver equalizer	1	1	91	93	-79	-84	8 ~ 48	I2S/TDM/PCM	2/3-Wire	2.5V ~ 3.6V 1.6V ~ 3.6V	QFN24 (4×4)
NAU88C20YG	Stereo Audio CODEC	2	2	90	94	-80	-84	8 ~ 48	I2S/TDM/PCM	2/3/4-Wire	2.5V ~ 3.6V 1.6V ~ 3.6V	QFN32 (5×5)
NAU88C22YG	Stereo Audio CODEC with speaker driver	2	2	89	89	-78	-84	8 ~ 192	I2S/TDM/PCM	2/3/4-Wire	2.5V ~ 3.6V 1.6V ~ 3.6V	QFN32 (5×5)
NAU88L11YG	Ultra Low Power Mono Audio CODEC with class-G headphone driver	1	1	103	105	-93	-85	8 ~ 96	I2S/TDM/PCM	2-Wire	1.6V ~ 2.0V 1.6V ~ 3.6V	QFN20 (4×4)
NAU88L21IG	Ultra Low Power Stereo Audio CODEC with class-G headphone driver	2	2	103	105	-91	-80	8 ~ 192	I2S/TDM/PCM	2-Wire	1.6V ~ 2.0V 1.6V ~ 3.6V	QFN32 (4×4)
NAU88L21YG	Ultra Low Power Stereo Audio CODEC with class-G headphone driver	2	2	103	105	-91	-80	8 ~ 192	I2S/TDM/PCM	2-Wire	1.6V ~ 2.0V 1.6V ~ 3.6V	QFN32 (5×5)
NAU88L24IG	Ultra Low Power Stereo Audio CODEC with advanced headset detection class-D amp	2	2	100	103	-85	-77	8 ~ 96	I2S/TDM/PCM	2-Wire	1.6V ~ 2.0V 1.6V ~ 3.6V	QFN48 (6×6)

Part No	Description	# of ADC	# of DAC	SNR (dB) ADC	SNR (dB) DAC	THD (dB) ADC	THD (dB) DAC	Sample Rate (kHz)	Audio Format	CTRL IF	Analog/ Digital (V)	Package (mm)
NAU88L24VG	Ultra Low Power Stereo Audio CODEC with advanced headset detection class-D amp	2	2	100	103	-85	-77	8 ~ 96	I2S/TDM/PCM	2-Wire	1.6V ~ 2.0V 1.6V ~ 3.6V	WLCSP56
NAU88L24YG	Ultra Low Power Stereo Audio CODEC with advanced headset detection class-D amp	2	2	100	103	-85	-77	8 ~ 96	I2S/TDM/PCM	2-Wire	1.6V ~ 2.0V 1.6V ~ 3.6V	QFN48 (7×7)
NAU88L25VGB	Ultra Low Power Stereo Audio CODEC with advanced headset feature class-G headphone driver	1	2	101	124	-91	-89	8 ~ 192	I2S/TDM/PCM	2-Wire	1.6V ~ 2.0V 1.6V ~ 3.6V	WLCSP42
NAU88L25YGB	Ultra Low Power Stereo Audio CODEC with advanced headset feature class-G headphone driver	1	2	101	124	-91	-89	8 ~ 192	I2S/TDM/PCM	2-Wire	1.6V ~ 2.0V 1.6V ~ 3.6V	QFN32 (5×5)
NAU88U10YG	Mono Audio CODEC (*AEC-Q100)	1	1	91	93	-79	-84	8 ~ 48	I2S/TDM/PCM	2-Wire	2.5V ~ 3.6V 1.6V ~ 3.6V	QFN20 (4×4)
NAU88U22AYG	Stereo Audio CODEC (*AEC-Q100) with speaker driver	2	2	90	94	-80	-84	8 ~ 48	I2S/TDM/PCM	2/3/4-Wire	2.5V ~ 3.6V 1.6V ~ 3.6V	QFN32 (5×5)

Amplifier

Manufacturers:

Фирма	Link	Продукция	Продажники
Diodes	https://www.diodes.com/	Amp, ...	-
Nsiway	http://www.nsiway.com.cn/news/15.html	Amp, Touch controller, ...	Компел, Чип-дип
Heroic	https://www.heroic.com.cn/	Amp, power, rgb driver, ...	Компел

Фирма	Link	Продукция	Продажники
Hmsemi	https://hmsemi.com/	Amp AB\D, power, ... много всякого разного!!!	?

Hmsemi	HM8881		6.5W	ClassD\AB	SOIC8	https://hmsemi.com/downfile/HM8881.PDF
Heroic	HT6873	0.2$	2.5W	ClassD	SOIC8	https://www.heroic.com.cn/public/uploads/file/20191114/1573699200606250.pdf
Nsiway	NS4150B, NS4150C	0.08$	2.5W	ClassD	SOIC8, MSOP8	https://static.chipdip.ru/lib/002/DOC013002158.pdf
Diodes	PAM8302A	0.12$	2.5W	ClassD	SOIC8, MSOP8, DFN8	https://www.diodes.com/assets/Datasheets/PAM8302A.pdf

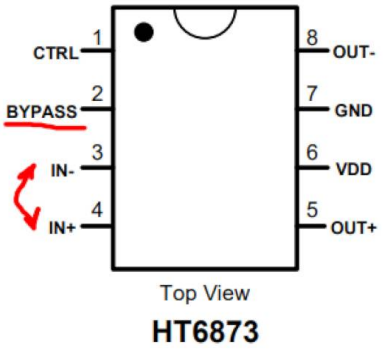

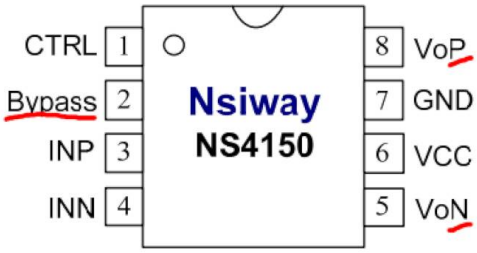

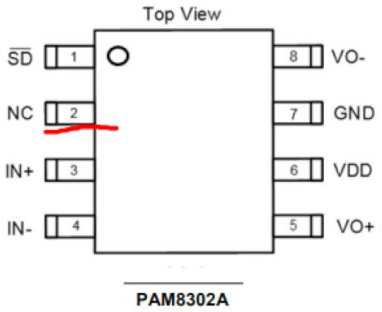

Buzzers

Manufacturers:

CUI	https://www.cuidevices.com/catalog/audio/buzzers
JL WORLD	https://www.jlworld.com/products/pin/
KLS	https://klsele.com/products/Buzzers-Microphones-Speakers.html

- audio indicators
  - internal drive circuit
  - drive
    - Vdc
      - dc voltage
    - Vac
      - ac voltage
- audio transducers
  - external drive circuit
  - drive
    - Vo-p

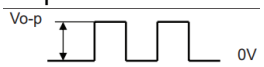

    - Vp-p

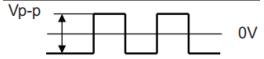

    - Vdc
      - for 3 pin piezo ???? непонятно...

- piezo elements
  - external drive circuit
    - Vp-p
- sirens

CEM-1206S	CUI	audio transducer	Vo-p	6V
HCM1206A	JL WORLD	audio transducer	Vo-p	5V
L-KLS3-MT-12×09-B	KLS	audio transducer	Vo-p	5V
HCM1203X	JL WORLD	audio indicator	Vdc	3V
HCM1201X	JL WORLD	audio indicator	Vdc	1.5V

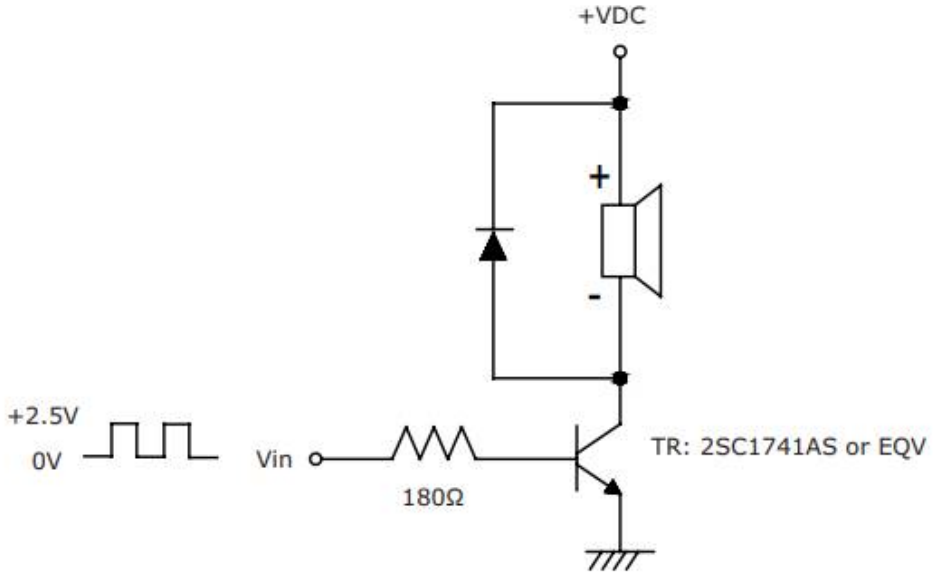

Drive circuit 1: (external,

Drive circuit 2 (external, Vpp 3pin piezo):

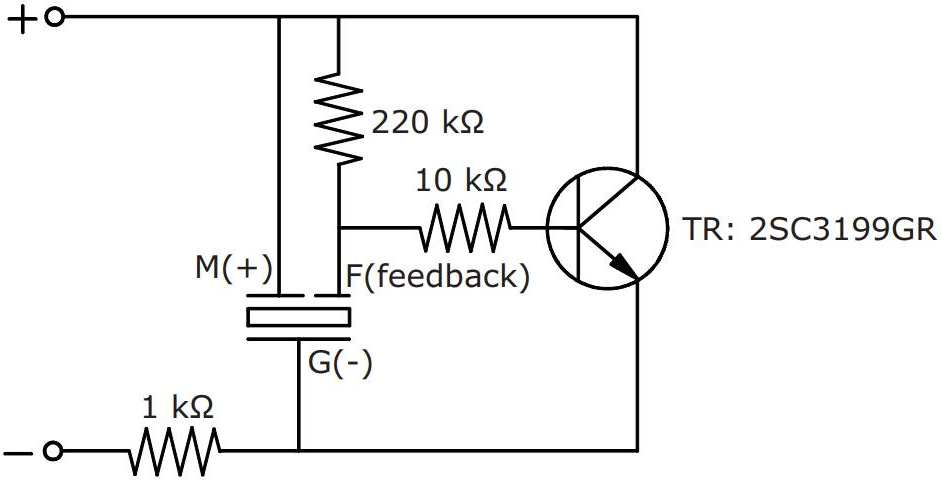

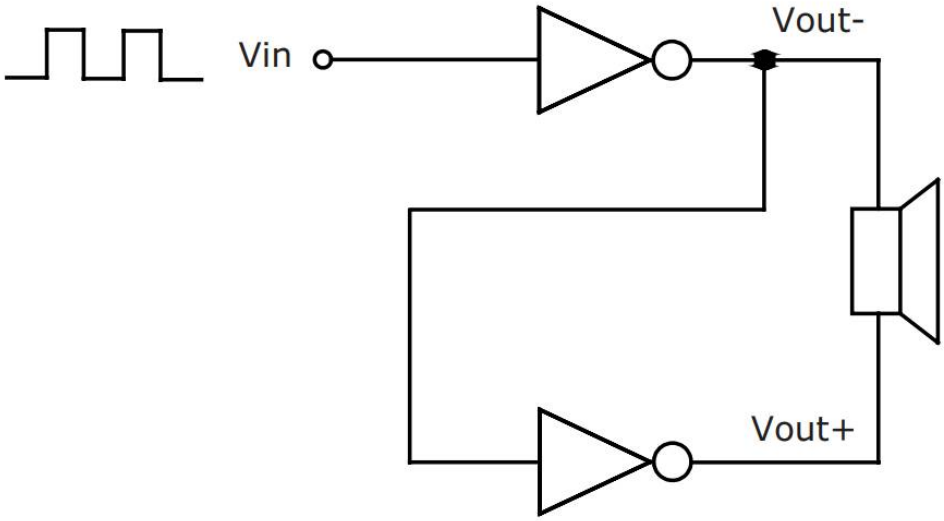

Drive circuit 3 (external, ' , , ,

Microphone

Чувствительность микрофона приводят в dB, но при разных условиях:

- f=1KHz, 0dB=1V/µbar
- f=1KHz, 0dB=1V/pa

Use “Pascal (Pa)”indication of sensitivity as per the recommendation of I.E.C.(International Electro technical Commission).The Sensitivity of “Pa” will increase 20dB comparing with “ubar” indication.

Example: -60dB (0dB=1V/ubar) =-40dB (1V/Pa)

Mfg	P\N	Sensivity	Freq	SNR	RL	Op. Voltage	Current	Description	Link
RUICHI	DG06050CD-P	-46dB...-36dB (0dB=1V/**µBar**,1KHz), -3dB (3V)	20Hz...16KHz, Omni	60dB	2K2	4.5V (10V)	0.5mA	Электретный микрофон D6-H5-C1.9-TH	DG06050CD-P
VOISE	VS6050PS32	-35dB...-29dB (0dB=1V/Pa,1KHz), -3dB (2...1.5V)		55dBA	2K2	4.5V (1-10V)	0.5mA, 2V, 2K2	Электретный микрофон D6-H5-C1.9-TH	
VOISE	VS6027PS30	-33dB...-27dB (0dB=1V/Pa,1KHz), -3dB (2...1.5V)		55dBA	2K2	2V (1-10V)	0.5mA, 2V, 2K2	Электретный микрофон D6-H2.7-C1.9-TH	
SoniCrest	HMO0603A-60	-43dB...-37dB (0dB=1V/Pa,1KHz),	50Hz...16KHz, Omni	58dB	2K2	3V (10V)	0.5mA	Электретный микрофон D6-H5-SMD	

Speaker

Manufacturers:

RUICHI	https://ruelectronics.com/
KLS	https://klsele.com/

?	динамики aliexpress				
RUICHI	S1585	W10-L20	H4	1W	8R

RUICHI	HD-2040	W20-L40	H5.8	1W	8R
?	???	W20-L40	H5.8	2W	8R
RUICHI	S1801	D28	H6	2W	4R
KLS	L-KLS3-YS03B-32MM-8R2W	D32	H5	2W	8R